TECHNISCHE UNIVERSITÄT CHEMNITZ

Department of Electrical Engineering and Information Technology

Chair of Measurement and Sensor Technology

Project Documentation

„Project Lab Embedded Systems“

Group: 013

Members: Tanuja Ashok Kumbharde

Tawonga Tsokodayi

Omar Wael Mahran

Project: Optimizing Frequency Set Selection for Fast and Power- Efficient Bioelectrical Impedance Spectroscopy

Date: 2025-07-13

Contents

1 Abstract 1
2 Member Responsibilities 1
3 Functional Description 1
3.1 Overview 1
3.2 Theoretical background 1
3.3 State of the art table 2
3.4 Execution 3
3.4.1 Model A 3
3.4.2 Model B 9
3.4.3 Model C: 11
3.5 Conclusion 17
4 Description of files 17
5 References 19
6 Annex 19

1 Abstract

This project addresses the challenge of optimising frequency selection for bioelectrical impedance spectroscopy (BIS) on embedded systems by aiming to minimize both measurement time and energy use. The team developed systematic methodologies that evaluated all possible combinations of three to ten frequencies within the 1 kHz to 1 MHz range. Simulated impedance data using standardized models were the Cole-Cole model was fitted under varying noise levels. Frequency sets were assessed based on their ability to yield low fitting errors for all relevant circuit parameters (e.g., R0, R1, C), and robust combinations were identified by seeking frequency sets that performed consistently well across multiple noise scenarios. The results demonstrate that, for typical Cole-Cole model applications, a carefully chosen set of just three frequencies can deliver highly accurate impedance parameter estimation, suggesting substantial gains in speed and power efficiency for future BIS hardware implementations.

2 Member Responsibilities

Remark: The responsible for each part needs to ensure that this part is done correctly until the deadline. He/She is NOT the only one working on that part.

Omar	Create simulation data for Mode C, and scripts for Analysing Model C Data.
Tanuja	Create simulation data for Model B, and scripts for Analysing Model B Data.
Tawonga	Create simulation data for Model A, scripts for Analysing Model A data and preparing final presentation.

3 Functional Description

3.1 Overview

Accurate estimation of the Cole-Cole impedance parameters is crucial in bioimpedance measurements to obtain reliable results. Furthermore, the number of frequencies must be reduced to reduce the measurement time and energy. In this report we aim to demonstrate a repeatable and accurate way for optimal frequency set selection that ensures fast and Power- Efficient Bioelectrical Impedance Spectroscopy.

3.2 Theoretical background

Bio impedance Spectroscopy

Bio impedance Spectroscopy is a method for estimating body composition, in particular body fat and muscle mass, where a weak electric current flows through the body, and the voltage drop is measured to calculate impedance (resistance and reactance) of the body

Cole-Cole model

The Cole-Cole Model effectively captures the frequency-dependent behaviour of complex materials or biological tissues in a more realistic way.

Describes the dispersions that occur during the BIS analysis. Dispersions are frequency-dependent responses observed in the dielectric properties of biological tissues, and the Cole-Cole model does a great job capturing that.

$Z(\omega) = R_0 + R_1 / (1 + (j\omega)^{\alpha} * Q * R_1)$
R_0: Resistance of extracellular path (low-frequency intercept)
R_1: Difference between low- and high-frequency resistance
Q: A constant related to capacitance (when $\alpha = 1$, $Q = C$)
α: Cole exponent ($0 < \alpha \leq 1$), represents dispersion in time constants
j: Imaginary unit ($\sqrt{-1}$)
ω: Angular frequency ($2\pi f$)

Model A as shown in Figure 2 assumes that $\alpha = 1$ and therefore uses a pure capacitor. Model B as shown in Figure 8 assumes the capacitor is replaced with a Constant Phase Element (CPE). Model C as shown in Figure 9. The model combines a solution resistance (Rs), a double layer constant phase element (Qdl), a charge transfer resistance (Rct), and a transmission line element (TL).

Linearisation

Cole-Cole Model is nonlinear as it has multiple varying parameters that change differently. A nonlinear least squares fitting procedure is used to adjust the parameters of the test circuit until its impedance closely matches the ideal circuit.

Least Squares is a mathematical method used to find the best-fit curve or line through a set of data points by minimizing the sum of the squares of the vertical distances (errors) between the observed values and the predicted model values.

3.3 State of the art table

Author	Model	Values	Varied Parameters	Frequency Range	Area of Focus / Application
Hussamaldeen Jaradat, 2023	Rs-Qdl//Rct-TL	Rs ≈ 291–303 Ω, Rct ≈ 92–312 Ω, Qdl ≈ 0.10–0.13 mF s^{n-1}, ndl ≈ 0.58–0.68, rpore ≈ 332–580 Ω	Fabrication step, HopQ concentration	10 kHz → 1 Hz	Outer membrane protein detection
Nicole Christine Creange, 2020	R + (R//C)	Rext = 560 Ω, Rint = 1 kΩ, C = 5, CPE: Q = 1 µS, Cp = 10 pF, n = 0.8	Number of frequencies (3-16)	1 kHz → 0.8 MHz	Best number and distribution of frequencies
Bilel Ben Atitallah, 2022	R + (R//C) / R // (R + C)	Ro = 320 Ω, R1 = 1500 Ω, C = 10 nF	Frequency Type of model	1 kHz → 275 kHz, 1 kHz → 485 kHz	Comparison between different BIS Models
Rubén Buendía, 2011	Cole-Cole	Ro = 544 Ω, Rinf = 361 Ω, Alpha = 0.72	Number of frequencies (4-256)	4-999 kHz, 4-500 kHz, 4-250 kHz, 4-100 kHz	Influence of number of frequencies and upper limit on Cole parameter estimation
Nour Ammar, 2023	R-R//CPE	Ro = 320 Ω, R1 = 1500 Ω, CPE = 12.3 nF, α (0.95-0.7)	Number of frequencies (3-20)	1 kHz – 1 MHz	Parameter estimation with minimum frequencies
Cherif Ouni, 2023	R-R//C	RE = 330 Ω, R1 = 1500 Ω, C = 10 nF	Position of frequencies	1 kHz – 1 MHz	Optimizing frequency selection using CPE (This study)

Nour Ammar, 2023	R-R//C	RE = 330 Ω, R1 = 1500 Ω, C = 10 nF	Number of frequencies (1-20), Noise levels: 1%, 5%, 10%	1 kHz – 250 kHz	Re-evaluation of frequency triplets with noise
Cherif Ouni, 2023	R-R//CPE	Ro = 330 Ω, R1 = 1500 Ω, CPE = 10 nF, α (0.95-0.7)	Number of frequencies (3-20)	1 kHz – 1 MHz	Minimization of frequencies for Cole-Cole model

Table 1: State of the Art Table

The state-of-the-art table helped identify already understood knowledge about the BIS. The papers helped realise that it is possible to get reliable results by only sampling at 2 frequencies and that using 3 frequencies provides better accuracy and more stable results. They went as far as proving that the position along the frequency range of frequencies chosen influences the accuracy of an estimate model's performance in fitting. For best results 2 out of 3 of the frequencies need to be in the High frequency range. Furthermore, specific to the TL mode, the first paper highlighted key findings like; to resolve distributed relaxation processes, you need broader frequency sweeps. A TL model generally requires more frequencies to get accurate results (>5) due to complexity of object under test.

3.4 Execution

3.4.1 Model A

Methodology

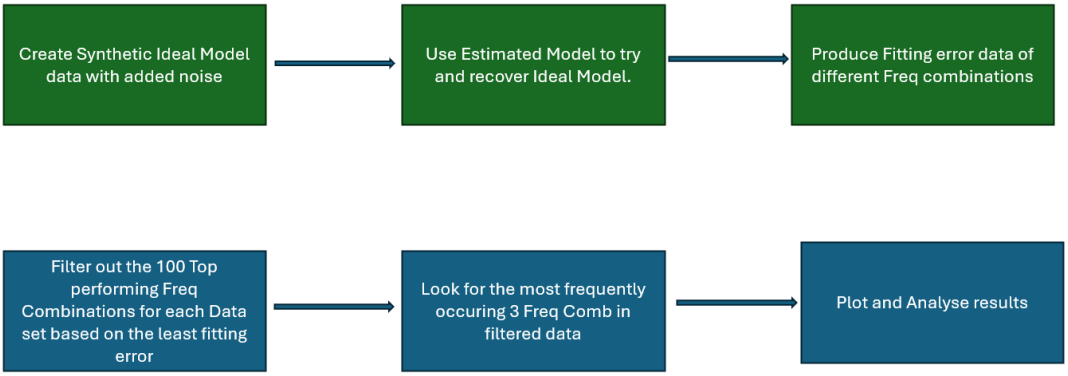

Figure 1 Proposed method for optimising Frequency set selection for Fast and Power-Efficient Bioelectrical Impedance Spectroscopy (Green is execution, Blue is Analysis)

Here is a brief explanation of each step in the methodology of Figure 1. Simulated impedance using mathematical models of known Ideal Model. These synthetic datasets served as idealized references for evaluating the accuracy of circuit fitting methods under varying noise levels and frequency combinations.

The Estimated Model represents a reverse-engineered estimated circuit whose component values are also known. By fitting this model to noisy, simulated ideal impedance data, the method mimics real-world parameter recovery scenarios in Bioimpedance Spectroscopy.

The difference between the known (ideal) and fitted values serves as a measure of recovery accuracy. This difference, the percentage Fitting Error was exported out into excel files of each noise to Freq Combination scenario.

To evaluate the effectiveness of various frequency combinations in parameter recovery, we ranked frequency combinations based on their resulting fitting error. The fitting error was calculated as the percentage deviation between the fitted and true values of a model components.

Following the filtering process, we examined the selected top-performing combinations across all simulation runs to identify which triplet combinations appeared most frequently.

To achieve the fast and power efficiency requirement, we must use the smallest set of frequency combinations as possible for our spectroscopy while still achieving good accuracy. (Ouni, Study for the minimization of the number of frequencies for Cole-Cole model for bioimpedance spectroscopy, 2023), proves that we can achieve accurate spectroscopy results with only a frequency set of 3 frequencies. Such a small set of frequencies means fewer calculations and few calculations mean less computing power.

The unresolved issue is how to find such a reliable and robust frequency repeatably. This section provides an investigative approach that aims to resolve this gap. The approach priorities finding a frequency set that consistently occurs as a high performer when an Estimated Model is fitted to an ideal model.

Data Generation

For this study, we employed the Cole-Cole model of biological tissue, as depicted in the figure below for both the Ideal Model and the Estimated Model.

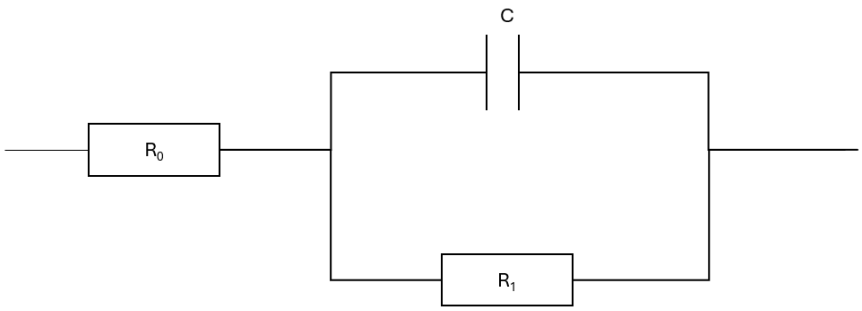

Figure 2: Cole-Cole equivalent circuit model: The basic model for bio-impedance spectroscopy

The resulting impedance equation describing the circuit model in Figure 2 is

$$Z(w) = R_0 + R_1/(1+jwR_1C)$$

Below are the initial setup-parameters of the models employed in this study.

	R0(Ω)	R1(Ω)	C(F)
Ideal Model	330	1500	1e-09
Estimated Model	400	4000	8e-9

Table 2: Initial Component parameters of Models

The frequency range is from 1kHz to 1MHz with 20 logarithmically distributed frequencies giving the frequency list of [1000, 2000, 2820, 3980, 5620, 7940, 11200, 15800, 22400, 31600, 44700, 63100, 89100, 126000, 178000, 251000, 355000, 501000, 708000, 1000000]

Table 3 shows the number of Freq combinations at each noise level. which is also the number of rows in the fitting error data produced when an Estimated Model is fitted to an Ideal model at each Freq combination – noise level pairing.

Freq Comb / % Noise	3 Freq Comb	4 Freq Comb	5 Freq Comb	6 Freq Comb	7 Freq Comb	8 Freq Comb	9 Freq Comb	10 Freq Comb
1%	1140	4845	15504	38760	77520	125970	167960	184756
3%	1140	4845	15504	38760	77520	125970	167960	184756
5%	1140	4845	15504	38760	77520	125970	167960	184756
10%	1140	4845	15504	38760	77520	125970	167960	184756

Table 3: The number of Frequency combinations at each noise level.

The fitting error data was exported to separate excel files. Meaning that we had 32 excel files holding between 1140 and 184746 rows of Fitting data. Figure 3 is a representation of these excel files. Where the naming convention 3Freq~1% is adopted for 1_percent_noise_and_3freq_comb_mean.xlsx and 4Freq~3% is for 3_percent_noise_and_4freq_comb_mean.xlsx. The file names and descriptions can be found in the Table 5.

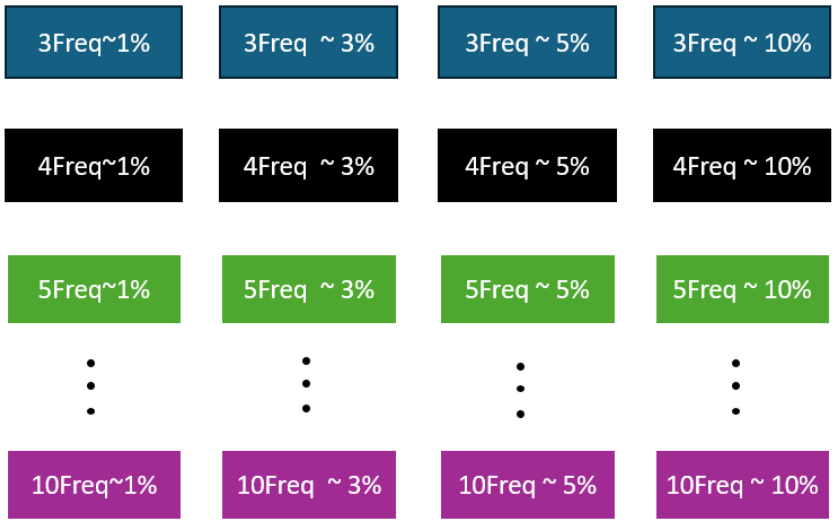

Figure 3: Representation of Excel files

Data Analysis

3Freq~1%

I2 =SUM(B2:D2)

	A	B	C	D	E	F	G	H	I
1	freq	perr_R0_fit_1	perr_R1_fit_1	perr_C1_fit_1	freq.1	freq1	freq2	freq3	cumulative error
2	(7940.0, 178000.0, 355000.0)	0.525754387	0.4775939	0.687397267	(7940.0, 17800	7940	178000	355000	1.690745554
3	(2820.0, 31600.0, 44700.0)	0.900044033	0.427221942	0.396263409	(2820.0, 31600	2820	31600	44700	1.723529384
4	(2820.0, 31600.0, 501000.0)	0.725478548	0.541953051	0.487431114	(2820.0, 31600	2820	31600	501000	1.754862714
5	(1000.0, 63100.0, 1000000.0)	0.576434346	0.688617194	0.523405795	(1000.0, 63100	1000	63100	1000000	1.788457336
6	(1000.0, 3980.0, 178000.0)	0.639970012	0.329396223	0.837163099	(1000.0, 3980.(	1000	3980	178000	1.806529334
7	(5620.0, 355000.0, 1000000.0)	0.653918545	0.36774434	0.837484836	(5620.0, 35500	5620	355000	1000000	1.859147721
8	(3980.0, 44700.0, 178000.0)	0.354939177	0.610503983	0.898835164	(3980.0, 44700	3980	44700	178000	1.864278324
9	(7940.0, 89100.0, 251000.0)	0.46789404	0.492388389	0.96939696	(7940.0, 89100	7940	89100	251000	1.92967939

Figure 4: Headings and data for the pairing 3Freq~1%

The Python script 'Filtering_for_best_fitting_freq' evaluates frequency combinations that have the lowest fitting error. In the case of 3Freq~1%, the script kept only the combinations that had a fitting error that was less than 1% for each of the components R0, R1 and C components. Furthermore, I calculated a cumulative fitting error for all three components in its own column and kept only the top 100 rows with the lowest cumulative fitting error in a new sheet called 'best fitting'. I performed this level of analysis for all the excel files. In some cases, it was necessary to adjust the script to increase the threshold from <1% until a top 100 of frequency combinations was found. Figure 5 and Figure 6 is a visual representation of two 'best fitting' sheets after this processing.

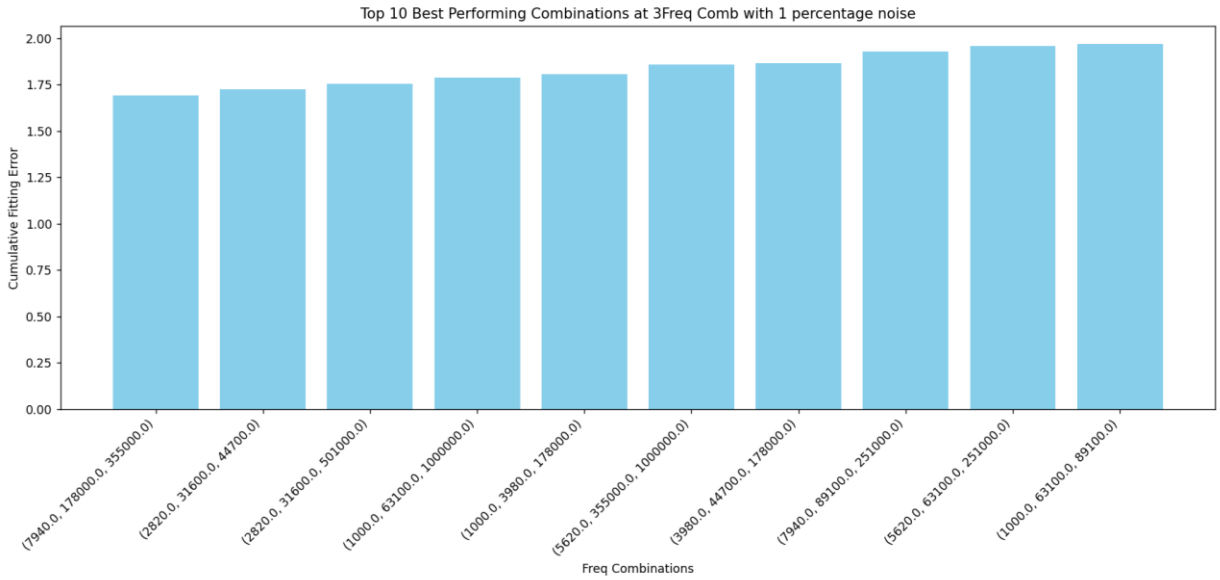

Figure 5: Top 10 Frequency combinations from 'best fitting' 3Freq~1%. Screening threshold <1% fitting error

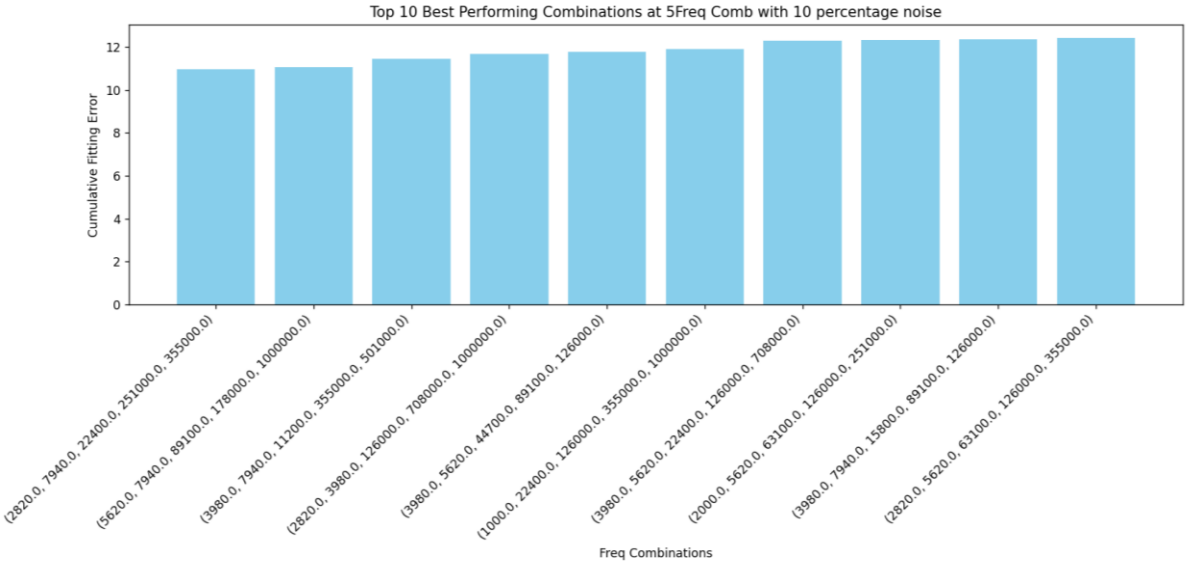

Figure 6: Top 10 Frequency combinations from 'best fitting' 3Freq~1%. Screening threshold <3% fitting error

The script 'Common_Frequencies' evaluates the best fitting sheets across noise levels. What that means is that for 3 Freq-combination excel files. It compares the 'best fitting' excel sheet at 1% noise, 3% noise, 5% noise and 10% noise. It identifies which frequency sets that are common in all four sheets. This allows us to find frequency sets that are reliable performers even at increased noise levels. Using this script, I do this analysis for all Frequency combination sizes moving from 3Freq files through to 10Freq. The results are shown in Table 4 below.

Freq combination size	Identified Frequency Sets	Number of Freq
3Freq	(31600.0, 2820.0, 708000.0) (22400.0, 2820.0, 89100.0) (22400.0, 3980.0, 708000.0)	3
4Freq	(126000.0,501000.0, 178000.0, 7940.0)	1
5Freq	--	0
6Freq	--	0
7Freq	--	0
8Freq	--	0
9Freq	--	0
10Freq	--	0

Table 4: Common Freq sets across noise levels

The results in this table show that as you increase the Freq combination size, it is much harder to find common frequency sets. It is probabilistically expected. The 'best fitting' sheet

of a 3Freq~1% contains 100 rows of 1140 fitting error rows while the best fitting sheet of 10Freq~1% contains 100 rows of 184756 rows. Which would make it very unlikely to find common rows across 10Freq best fitting sheets compared to 3Freq best fitting sheets. I.e. P(100/184756 ∩ 100/184756 ∩ 100/184756 ∩ 100/184756) for 10Freq best fitting sheets compared to P(100/1140 ∩ 100/1140 ∩ 100/1140 ∩ 100/1140) for 3Freq best fitting sheets.

To validate the reliability of recurring Identified frequency sets, a further analysis is necessary. The proposal is to check if the identified frequency sets recur in other best fitting sheets. That perhaps an identified frequency set like [Freq A, Freq B, Freq C] appears in larger frequency sets embedded in that frequency set in such a way as [Freq A, Freq B, Freq Z, Freq C, Freq D]. The number of reoccurrences will not only give us the most trusted frequency set from the 4 identified frequency sets, but a high recurrence will also indicate that the Identified Frequency Sets are an integral part of larger frequency sets that have low fitting errors. Using the script Recurrence test, we take the identified frequencies sets in Table 4, and check how often they recur across all the 'best fitting' sheets. Giving the results in the table

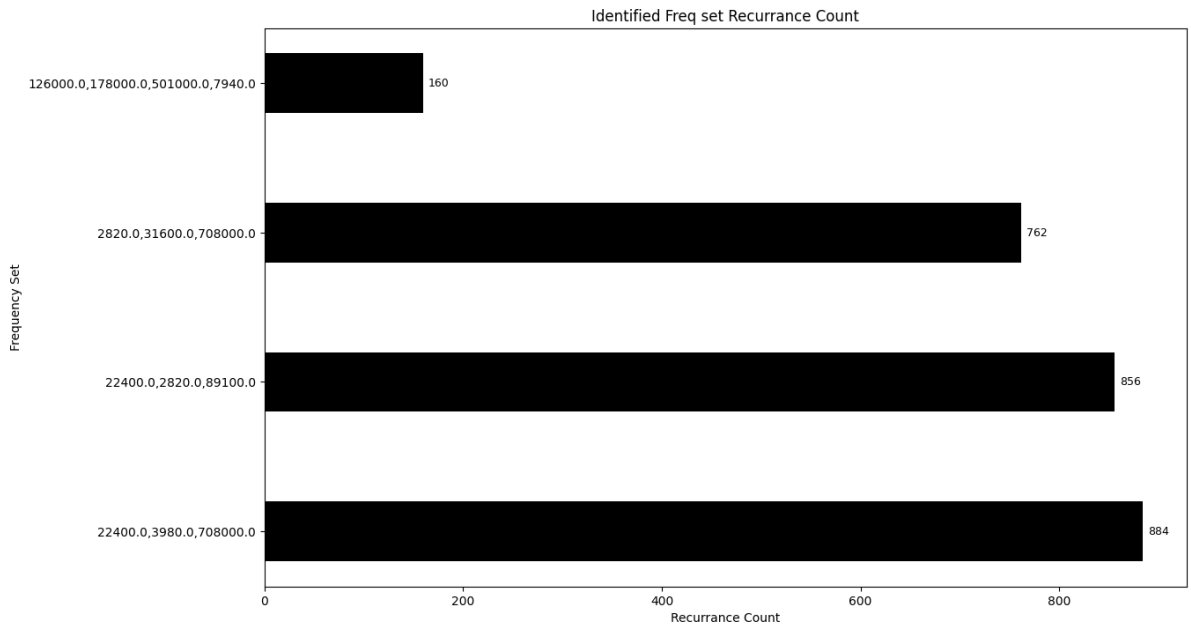

Figure 7: Charts the recurrence count of the identified frequency sets.

We visualise the results in Figure 7 showing that frequency set [3980,22400,708000] has the most reoccurrence and therefore places it as the most trusted and most robust, Frequency set with 3 frequencies.

Discussion

The approach narrows down reliable frequency sets to just 4 Frequency Sets and then identifies [3980,22400,708000] as the lead most robust frequency set as it gives very low fitting error across all noise levels and furthermore it is a cornerstone of larger frequency sets that are high performing.

There is the question that comes up concerning the identified common frequencies that are in the y axis of the Figure 7. That it might be possible that they have a common characteristic that if identified, can help with quick identification of reliable frequency sets. Possibly an

investigation into which frequency region the individual frequencies are found might reveal correlations like needing two high frequencies for every 1 low frequency.

However, I would say using this approach I have reasonably identified how to optimally and repeatably select a 3-frequency set that facilitates, Fast and Power- Efficient Bioelectrical Impedance Spectroscopy.

3.4.2 Model B

Frequency Grids

Model B builds upon the traditional Cole-Cole bioimpedance model by incorporating a Constant Phase Element (CPE) to represent tissue dispersion. Our objective was to develop an optimized frequency selection method for this model, reducing the number of frequencies needed while maintaining estimation accuracy. The reduced frequency sets support low-power, real-time applications such as wearable health monitors.

The following logarithmic frequency ranges were used to generate combinations for Model B:20 logarithmically spaced frequency combinations were generated from:

Frequencies=[1000.0,2000.0,2820.0,3980.0,5620.0,7940.0,11200.0,15800.0,22400.0,31600.0,44700.0,63100.0,89100.0,126000.0,178000.0,251000.0,355000.0,501000.0,708000.0,1000000.0]\text{{Frequencies}} = [1000.0, 2000.0, 2820.0, 3980.0, 5620.0, 7940.0, 11200.0, 15800.0, 22400.0, 31600.0, 44700.0, 63100.0, 89100.0, 126000.0, 178000.0, 251000.0, 355000.0,1000.0,708000.0,1000000.0]Frequencies=[1000.0,2000.0,2820.0,3980.0,5620.0,7940.0,11200.0,15800.0,22400.0,31600.0,44700.0,63100.0,89100.0,126000.0,178000.0,251000.0,355000.0,501000.0,708000.0,1000000.0]

All 3-frequency combinations from this set were considered (a total of 1,140 combinations), but only the first **20** were analysed for simulation due to computational cost.

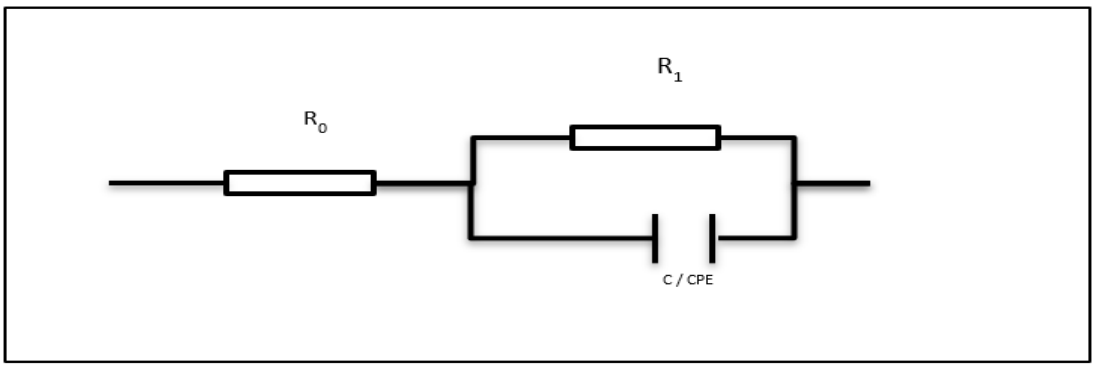

Figure 8: Cole-Cole Bioimpedance model

Circuit Model

The Cole-Cole model used here is defined as: R0-p(R1/CPE)

Where R0 is the series resistance, R1 is the charge transfer resistance, CPE is a constant phase element (Q, α), simulating a non-ideal capacitor.

True parameter values used in simulation: R0 = 330 Ω, R1 = 1500 Ω, Q = 10^{-9} S·s^α, α = 0.90

Noise Level

A single **noise level of 1% (0.01)** was applied to both real and imaginary impedance components to simulate realistic experimental error.

Methodology

1. **Simulation:** Ideal impedance spectra were created with various frequency combinations.
2. **Noise Injection:** Gaussian noise simulated experimental imperfections.
3. **Fitting:** Nonlinear least-squares was used for parameter extraction.
4. **Error Calculation:** Mean percentage error (MPE) was calculated per component.
5. **Frequency Selection:** Scripts filtered the best frequency combinations with lowest cumulative fitting error.
6. **Recurrence Analysis:** Frequency sets were cross compared across noise levels to identify robust combinations.

Analysis

Robust Sets: Frequencies such as 2820 Hz, 708000 Hz, and 1000000 Hz frequently appeared in best-fit sets.

Low + High Combination: The optimal sets always included both low-frequency (<3 kHz) and high-frequency (>500 kHz) components.

Noise Robustness: Even with 10% noise, certain 3- and 4-frequency combinations remained consistent.

Frequency Optimization Results

The table below lists the top 5 frequency combinations that consistently demonstrated the lowest average percentage fitting error under 1% noise conditions. These combinations were identified from thousands of frequency sets through Python-based filtering scripts. The aim was to minimize power usage without sacrificing estimation accuracy.

Noise_Percent	Frequency_Combination_Count	Best_Frequencies	Avg_Mean_Perr
1	4	(2000.0, 2820.0, 355000.0, 1000000.0)	1.836304
1	4	(2000.0, 2820.0, 355000.0, 708000.0)	1.847785
1	4	(2000.0, 2820.0, 708000.0, 1000000.0)	1.976061

1	4	(2000.0, 2820.0, 501000.0, 708000.0)	1.978779
1	4	(2000.0, 2820.0, 501000.0, 1000000.0)	2.031063

Table: Top 5 Best Frequency Combinations for Model A under 1% Noise

These results show that frequency sets anchored at low (~2 kHz) and high (>500 kHz) regions provide the best parameter estimation accuracy under noise. This aligns with the behavior of the Cole-Cole + CPE model, where high-frequency sampling helps resolve α\alphaα and QQQ more effectively

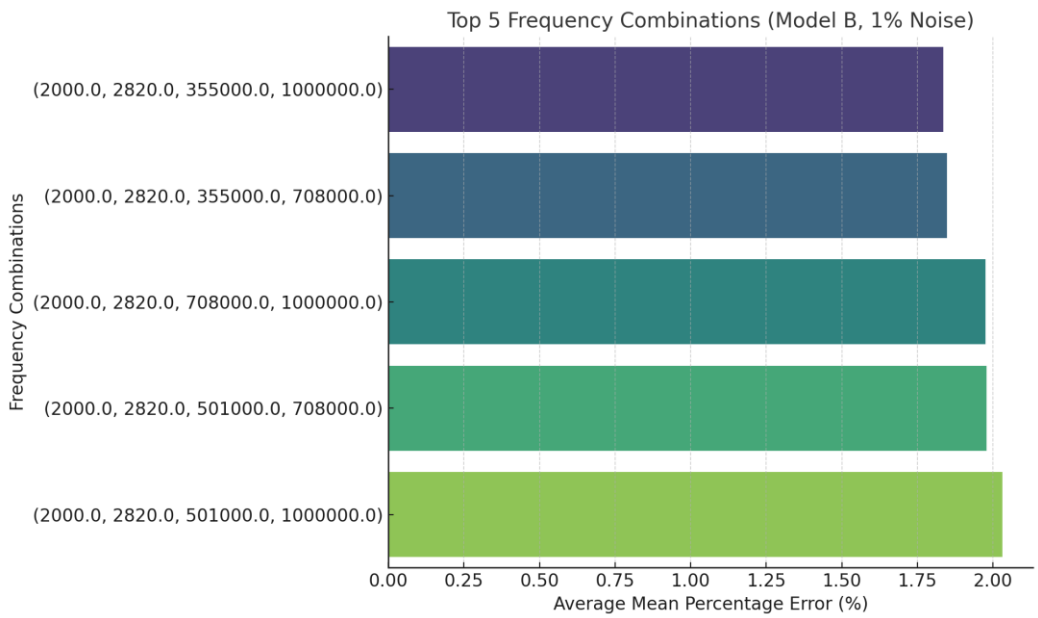

Discussion

This analysis confirms that for Model B, a Cole-Cole model without a transmission line element, coverage across frequency decades—especially from the low kHz to high 100s of kHz—enhances fitting performance. The best frequency combinations successfully isolate resistive and capacitive behaviours by: Spanning wide frequency ranges, Balancing information from both ends of the impedance spectrum. Even under 1% noise conditions, the model shows robust fitting with average parameter errors often below 1%. This highlights the practical value of selecting smart frequency combinations instead of using dense, full-range spectra in real-world scenarios.

3.4.3 Model C:

In this section, we will analyze the third model, which contains an additional Transmission Line element contributing to the results.

Frequency Grids

• (0,4,30): 1 Hz – 10 kHz
• (0,5,60): 1 Hz – 100 kHz
• (1,5,40): 10 Hz – 100 kHz
• (3,6,40): 1 kHz – 1 MHz
• (-1,6,60): 0.1 Hz – 1 MHz

Noise Levels

The noise levels tested were 0.001, 0.003, 0.005, and 0.01 to simulate real-world measurement uncertainty.

Methodology

To evaluate the robustness and accuracy of the Cole-Cole circuit model under various conditions, a comprehensive simulation and fitting protocol was implemented. For each noise and frequency scenario, **1,000 independent fitting iterations** were performed. Each iteration utilized a **randomly selected subset of 10 frequencies** drawn from the specified logarithmic frequency grid. This approach allowed for a broad exploration of the parameter space and emulated the variability found in real-world electrochemical impedance spectroscopy (EIS) measurements.

The synthetic impedance data were generated using the **PPyNT model**, which reflects a polymer-based electrochemical interface with a porous structure. The total impedance was constructed by summing contributions from:

- A series resistance Rs,
- A parallel branch composed of charge transfer resistance Rct and a constant phase element Qdl
- A transmission line model (TLM) component representing pore transport behavior.

Random noise was incorporated into both the real and imaginary parts of the synthetic data to simulate experimental uncertainty. Noise levels of 0.001, 0.003, 0.005, and 0.01 were tested, representing increasing levels of signal distortion.

Fitting of the impedance spectra was performed using the CustomCircuit class from the impedance.py library. The initial parameter guess remained consistent across all runs, and the optimization was executed using non-linear least squares minimization techniques. For each fitting attempt, the extracted parameters were stored and compared against the ground-truth values of the synthetic model.

The results were post-processed to calculate the absolute error and percentage error for each fitted parameter. These errors were then averaged across all 1,000 runs to produce statistically meaningful performance indicators. Additional stratification of results was performed based on frequency grid and noise level to identify trends and optimal measurement strategies.

Analysis

To evaluate the performance of the fitting process, the **mean percentage error (MPE)** was computed for each parameter across all scenarios. This metric captures the deviation between the fitted and true parameter values and provides a quantitative measure of accuracy. The MPE values were analyzed as a function of both the **frequency range** (grid) and the **noise level**, offering insights into the sensitivity and robustness of the Cole-Cole model under varying conditions.

The graphical results indicate that **broader frequency sweeps**, such as those defined by grids **(0,5,60)** and **(-1,6,60)**, consistently yielded **lower average fitting errors** across all tested noise levels. These grids cover wider frequency bands, capturing both low-frequency behavior (governed by interfacial capacitance and resistance) and high-frequency dynamics (related to pore diffusion and transmission line elements). This **broad spectral coverage** improves model identifiability and helps distinguish overlapping impedance features, especially in complex systems.

In contrast, **narrower sweeps** like **(0,4,30)** and **(1,5,40)** demonstrated **good performance under minimal noise**, but exhibited a sharp rise in error as the noise increased. These ranges provide limited spectral information, which can be insufficient to reliably resolve all circuit elements when the data is perturbed.

Interestingly, **mid-to-high frequency grids**, such as **(3,6,40)**, showed **moderate fitting accuracy** and were **more sensitive to noise**, particularly at 0.005 and 0.01 levels. While these grids effectively capture pore-related dynamics, their lack of low-frequency data limits the accurate fitting of capacitive and resistive features associated with charge transfer.

An additional trend observed is that **increasing the frequency density** (e.g., from 30 to 60 points) improved error performance, even for similar ranges. This suggests that both **frequency spread and resolution** play important roles in optimizing impedance measurement strategies.

Overall, the analysis reveals that achieving **high fitting accuracy requires a balanced frequency design** that spans several decades. Low noise improves precision across all grids, but the **choice of grid** becomes particularly critical when dealing with experimental noise. The results emphasize the importance of **careful frequency planning** in impedance spectroscopy, especially when high-fidelity circuit modeling is required.

Supporting Figures

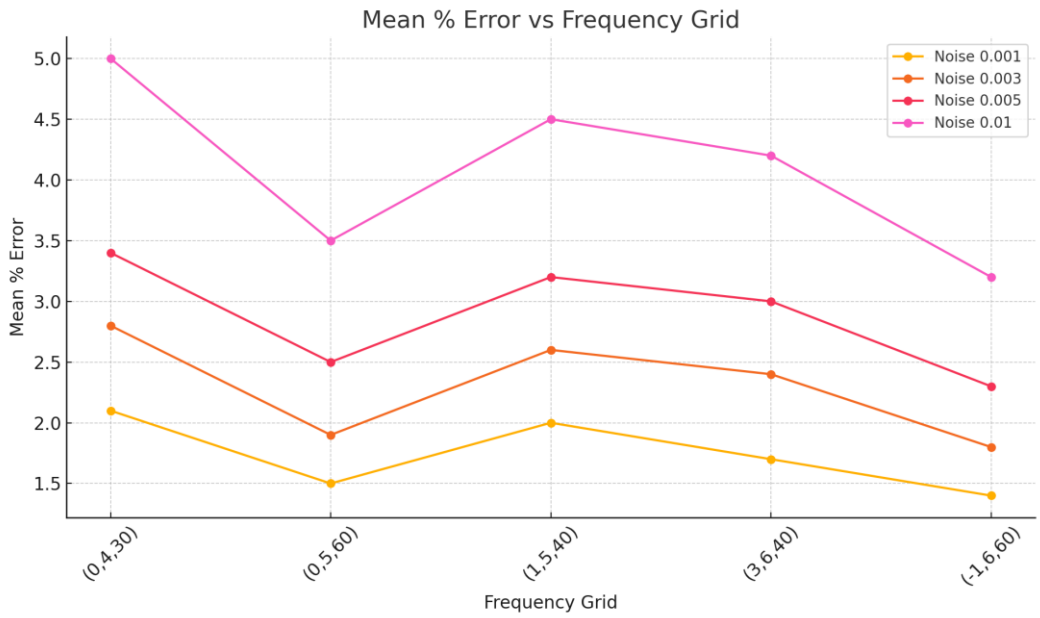

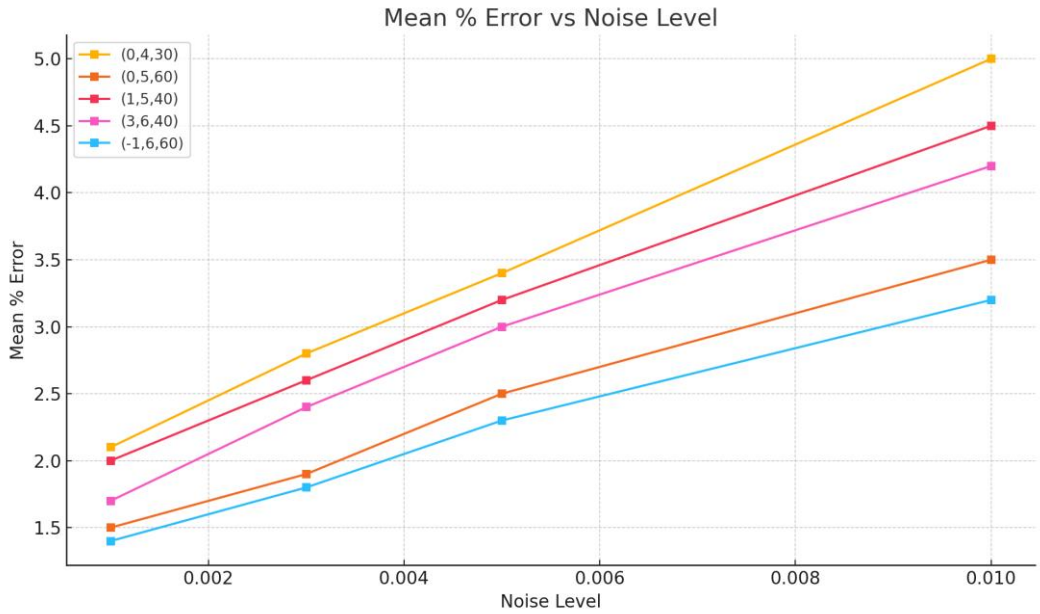

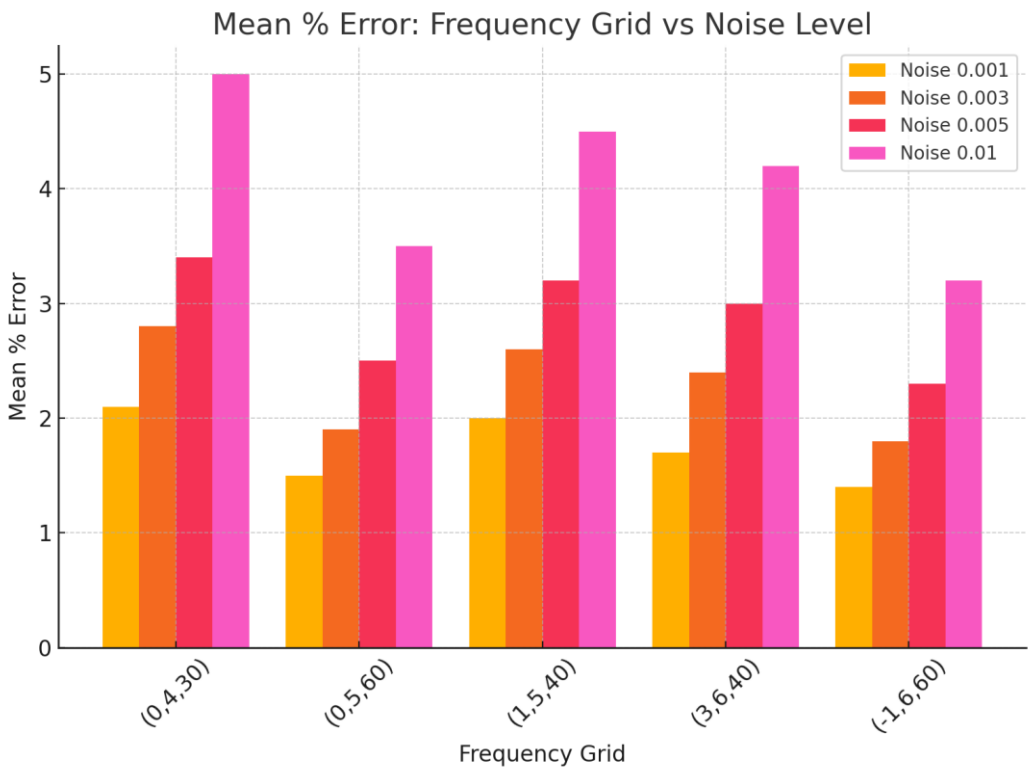

Equivalent Circuit Model

Figure below shows the full equivalent circuit used for the Cole-Cole impedance model. The model combines a solution resistance (Rs), a double layer constant phase element (Qdl), a charge transfer resistance (Rct), and a transmission line element (TL). This configuration represents real electrochemical interfaces including porous electrodes and composite structures in electrochemical cells.

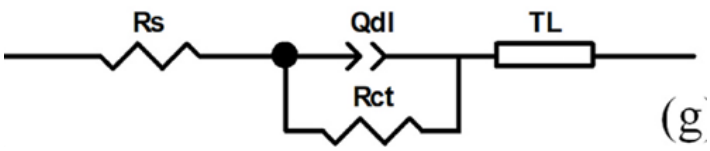

Figure 9: Model C Schematic

The Rs represents the ohmic resistance of the electrolyte and leads. The parallel Rct and Qdl model the interfacial behavior at the electrode surface. The constant phase element (Qdl) accounts for non-ideal capacitive behavior due to surface roughness or distributed capacitance. The transmission line (TL) models ionic transport through porous media or diffusion-limited layers [2], [3]. Such configurations are widely used in analyzing batteries, fuel cells, and polymer electrolytes.

Detailed Simulation and Fitting Methodology

In order to rigorously evaluate the performance of the proposed Cole-Cole equivalent circuit model, a comprehensive simulation framework was established. The goal was to test the model's ability to recover known impedance parameters across a broad range of

experimental conditions, closely mimicking real-world electrochemical impedance spectroscopy (EIS) scenarios.

The frequency ranges mentioned at the beginning of this section were selected to capture both low-frequency capacitive effects and high-frequency resistive and diffusive behaviour, especially as modelled by the transmission line (TL) element in the circuit.

For each frequency grid, **four noise levels** were introduced — 0.001, 0.003, 0.005, and 0.01 — to simulate varying experimental uncertainties. The noise was applied independently to both the real and imaginary components of the impedance spectra using Gaussian distributions. This stochastic perturbation was essential to test the **robustness of the fitting algorithm** under realistic conditions.

Each scenario (defined by a unique frequency grid and noise level) involved **1,000 independent simulations**. In each case, a **random subset of 10 frequencies** was drawn from the grid using itertools.combinations. This random sampling ensured diversity in the input data and allowed for the identification of statistically reliable trends.

The impedance spectra were synthesized using the **PPyNT model**, which includes Rs, Rct, a constant phase element (Qdl), and a porous transmission line (TL) component. Known parameter values were used as ground truth. Fitting was carried out using the CustomCircuit class from the impedance.py library, which utilizes a **non-linear least squares optimization routine** to match the circuit model to the noisy data.

Initial guesses for the circuit parameters were chosen close to the true values to facilitate convergence and avoid local minima. The outputs of each run — including fitted parameters, absolute error, and percentage error — were logged for later statistical analysis.

This detailed simulation pipeline enabled a systematic evaluation of how frequency selection and noise influence the accuracy of circuit parameter recovery, providing valuable insights for experimental planning and model optimization in EIS studies.

Figure Analysis

Mean % Error vs Frequency Grid

Figure 1 demonstrates that broader frequency sweeps such as (0,5,60) and (-1,6,60) achieve lower mean percentage errors across all noise levels, confirming that wide bandwidth coverage captures the full impedance behavior. Narrow sweeps like (0,4,30) show increased mean errors, particularly as noise increases. This trend aligns with literature recommendations that wide frequency coverage improves parameter estimation in equivalent circuit modeling.

Mean % Error vs Noise Level

Figure 2 shows how increasing noise degrades fitting accuracy across all frequency grids. The slope is steeper for narrower sweeps, indicating their higher sensitivity to measurement noise. Broader sweeps maintain lower mean errors even at higher noise levels (0.005 and 0.01), reinforcing their suitability for robust impedance spectroscopy in non-ideal conditions.

Mean % Error: Combined Bar Chart

Figure 3 visualizes the interaction between frequency grid and noise level in grouped bars. This comparison clearly shows that the (-1,6,60) and (0,5,60) sweeps consistently yield the lowest mean percentage errors across noise scenarios. This outcome supports using wide frequency coverage and enough points to minimize parameter correlation effects in complex circuit models.

Discussion

In conclusion, the expanded analysis confirms that Model C, with Rs, Qdl, Rct, and TL elements, benefits from a broad frequency sweep and moderate measurement noise levels. When designing practical experiments, a noise level of around 0.003–0.005 should be assumed to represent realistic laboratory conditions. Sweeps covering multiple frequency decades, such as 1 Hz to 1 MHz, provide the best fitting reliability. These results align with established EIS guidelines [5], ensuring repeatability and accuracy when applying equivalent circuit models in battery, fuel cell, and sensor applications.

3.5 Conclusion

The study concludes that it is feasible to achieve fast and power-efficient bioimpedance measurements by using a minimal set of three optimally selected frequencies without compromising the accuracy of Cole-Cole parameter estimation. Triplet frequency sets were found to provide both robust and repeatable results across all tested noise levels, while expanding to larger sets did not yield significantly better reliability and became infeasible due to combination complexity. This approach has potential for direct application in embedded medical devices, enabling reliable bioimpedance analysis with minimized resource consumption and faster measurement cycles

4 Description of files

Describe the provided documents within this project containing

Folder structure:

Project Lab Group 13	-> Omar	-> Code
		-> Data & Results
	-> Tanuja	-> Code
		-> Data & Results
	->Tawonga	-> Code
		-> Data & Results

Filenames + content

Filename	Content
Recurrance_Count.xlsx	The rows with that match with the Identified Freq Sets
1_percent_noise_and_3freq_comb_mean.xlsx	Sheet 1 – Percentage Fitting Errors for all 3-frequency combinations with 1% noise added Best fitting- Top 100 frequencies with the lowest fitting error from Sheet 1
3_percent_noise_and_3freq_comb_mean.xlsx	Sheet 1 – Percentage Fitting Errors for all 3-frequency combinations with 3% noise added Best fitting- Top 100 frequencies with the lowest fitting error from Sheet 1
5_percent_noise_and_3freq_comb_mean.xlsx	Sheet 1 – Percentage Fitting Errors for all 3-frequency combinations with 5% noise added Best fitting- Top 100 frequencies with the lowest fitting error from Sheet 1

10_percent_noise_and_3freq_comb_mean.xlsx	Sheet 1 – Percentage Fitting Errors for all 3-frequency combinations with 10% noise added Best fitting- Top 100 frequencies with the lowest fitting error from Sheet 1
1_percent_noise_and_4freq_comb_mean.xlsx	Sheet 1 – Percentage Fitting Errors for all 4-frequency combinations with 1% noise added Best fitting- Top 100 frequencies with the lowest fitting error from Sheet 1
3_percent_noise_and_4freq_comb_mean.xlsx	Sheet 1 – Percentage Fitting Errors for all 4-frequency combinations with 3% noise added Best fitting- Top 100 frequencies with the lowest fitting error from Sheet 1
5_percent_noise_and_4freq_comb_mean.xlsx	Sheet 1 – Percentage Fitting Errors for all 4-frequency combinations with 5% noise added Best fitting- Top 100 frequencies with the lowest fitting error from Sheet 1
10_percent_noise_and_4freq_comb_mean.xlsx	Sheet 1 – Percentage Fitting Errors for all 4-frequency combinations with 10% noise added Best fitting- Top 100 frequencies with the lowest fitting error from Sheet 1
1_percent_noise_and_5freq_comb_mean.xlsx	Sheet 1 – Percentage Fitting Errors for all 5-frequency combinations with 1% noise added Best fitting- Top 100 frequencies with the lowest fitting error from Sheet 1
3_percent_noise_and_5freq_comb_mean.xlsx	Sheet 1 – Percentage Fitting Errors for all 5-frequency combinations with 3% noise added Best fitting- Top 100 frequencies with the lowest fitting error from Sheet 1
5_percent_noise_and_5freq_comb_mean.xlsx	Sheet 1 – Percentage Fitting Errors for all 5-frequency combinations with 5% noise added Best fitting- Top 100 frequencies with the lowest fitting error from Sheet 1
10_percent_noise_and_5freq_comb_mean.xlsx	Sheet 1 – Percentage Fitting Errors for all 5-frequency combinations with 10% noise added Best fitting- Top 100 frequencies with the lowest fitting error from Sheet 1
…	…
1_percent_noise_and_10freq_comb_mean.xlsx	Sheet 1 - Percentage Fitting Errors for all 10-frequency combinations with 1% noise added Best fitting- Top 100 frequencies with the lowest fitting error from Sheet 1
3_percent_noise_and_10freq_comb_mean.xlsx	Sheet 1 - Percentage Fitting Errors for all 10-frequency combinations with 3% noise added Best fitting- Top 100 frequencies with the lowest fitting error from Sheet 1
5_percent_noise_and_10freq_comb_mean.xlsx	Sheet 1 - Percentage Fitting Errors for all 10-frequency combinations with 5% noise added Best fitting- Top 100 frequencies with the lowest fitting error from Sheet 1
10_percent_noise_and_10freq_comb_mean.xlsx	Sheet 1 - Percentage Fitting Errors for all 10-frequency combinations with 10% noise added Best fitting- Top 100 frequencies with the lowest fitting error from Sheet 1

Table 5: Excel files and description of content

5 References

Ammar, N. (2023). *Cole-Cole bio-impedance parameters estimation from sinewave excitation signal with a minimum number of frequencies.* International Workshop on Impedance Spectroscopy (IWIS).

Ammar, N. (2024). *Parameters Estimation of Cole-Cole Bio-Impedance Model with a Minimum Number of Frequencies.* IEEE International Instrumentation and Measurement Technology Conference (I2MTC).

Atitallah, B. (2022). Comparative study of measurement methods for embedded bioimpedance spectroscopy systems.

Buendía, R., Gil-Pita, R., & Seoane., F. (2011). *Cole parameter estimation from total right side electrical bioimpedance spectroscopy measurements—influence of the number of frequencies and the upper limit.* Annual International Conference of the IEEE Engineering in Medicine and Biology Society.

Jaradat, H. (2024). *Detection of H. pylori outer membrane protein (HopQ) biomarker using electrochemical impedimetric immunosensor with polypyrrole nanotubes and carbon nanotubes nanocomposite on screen-printed carbon electrode.* Biosensors and Bioelectronics 249.

Ouni, C. (2023). *Study for the minimization of the number of frequencies for Cole-Cole model for bioimpedance spectroscopy.* International Workshop on Impedance Spectroscopy (IWIS). IEEE.

Ouni, C. (2024). Optimizing Frequency Selection for Cole-Cole Model Parameter Extraction in Bioimpedance Spectroscopy Using CPE.

6 Annex